UNIVERSITY OF CAMBRIDGE INTERNATIONAL EXAMINATIONS
General Certificate of Education
Advanced Subsidiary Level and Advanced Level

CANDIDATE NAME

CENTRE NUMBER

CANDIDATE NUMBER

9303049988

PHYSICS **9702/23**

Paper 2 AS Structured Questions **May/June 2012**

1 hour

Candidates answer on the Question Paper.

No Additional Materials are required.

READ THESE INSTRUCTIONS FIRST

Write your Centre number, candidate number and name on all the work you hand in.
Write in dark blue or black pen.
You may use a soft pencil for any diagrams, graphs or rough working.
Do not use staples, paper clips, highlighters, glue or correction fluid.
DO **NOT** WRITE IN ANY BARCODES.

Answer **all** questions.
You may lose marks if you do not show your working or if you do not use appropriate units.

At the end of the examination, fasten all your work securely together.
The number of marks is given in brackets [ ] at the end of each question or part question.

For Examiner's Use	
1	
2	
3	
4	
5	
6	
7	
Total	

This document consists of **14** printed pages and **2** blank pages.

© UCLES 2012

Data

speed of light in free space, $c = 3.00 \cdot 10^{8}\ \text{m s}^{-1}$

permeability of free space, $\mu_0 = 4\pi \cdot 10^{-7}\ \text{H m}^{-1}$

permittivity of free space, $\varepsilon_0 = 8.85 \cdot 10^{-12}\ \text{F m}^{-1}$

$$\left(\frac{1}{4\pi\varepsilon_0} = 8.99 \cdot 10^{9}\ \text{m F}^{-1}\right)$$

elementary charge, $e = 1.60 \cdot 10^{-19}\ \text{C}$

the Planck constant, $h = 6.63 \cdot 10^{-34}\ \text{J s}$

unified atomic mass constant, $u = 1.66 \cdot 10^{-27}\ \text{kg}$

rest mass of electron, $m_e = 9.11 \cdot 10^{-31}\ \text{kg}$

rest mass of proton, $m_p = 1.67 \cdot 10^{-27}\ \text{kg}$

molar gas constant, $R = 8.31\ \text{J K}^{-1}\ \text{mol}^{-1}$

the Avogadro constant, $N_A = 6.02 \cdot 10^{23}\ \text{mol}^{-1}$

the Boltzmann constant, $k = 1.38 \cdot 10^{-23}\ \text{J K}^{-1}$

gravitational constant, $G = 6.67 \cdot 10^{-11}\ \text{N m}^2\ \text{kg}^{-2}$

acceleration of free fall, $g = 9.81\ \text{m s}^{-2}$

© UCLES 2012

Formulae

uniformly accelerated motion, $s = ut + \frac{1}{2}at^2$
$v^2 = u^2 + 2as$

work done on/by a gas, $W = p\Delta V$

gravitational potential, $\phi = -\frac{Gm}{r}$

hydrostatic pressure, $p = \rho gh$

pressure of an ideal gas, $p = \frac{1}{3}\frac{Nm}{V}<c^2>$

simple harmonic motion, $a = -\omega^2 x$

velocity of particle in s.h.m., $v = v_0 \cos \omega t$
$v = \pm \omega\sqrt{(x_0^2 - x^2)}$

electric potential, $V = \frac{Q}{4\pi\varepsilon_0 r}$

capacitors in series, $1/C = 1/C_1 + 1/C_2 + \ldots$

capacitors in parallel, $C = C_1 + C_2 + \ldots$

energy of charged capacitor, $W = \frac{1}{2}QV$

resistors in series, $R = R_1 + R_2 + \ldots$

resistors in parallel, $1/R = 1/R_1 + 1/R_2 + \ldots$

alternating current/voltage, $x = x_0 \sin \omega t$

radioactive decay, $x = x_0 \exp(-\lambda t)$

decay constant, $\lambda = \frac{0.693}{t_{\frac{1}{2}}}$

© UCLES 2012

[Turn over

Answer **all** the questions in the spaces provided.

1 **(a)** Explain the differences between the quantities *distance* and *displacement.*

.....

.....

.....[2]

(b) State Newton's first law.

.....

.....

.....[1]

(c) Two tugs pull a tanker at constant velocity in the direction XY, as represented in Fig. 1.1.

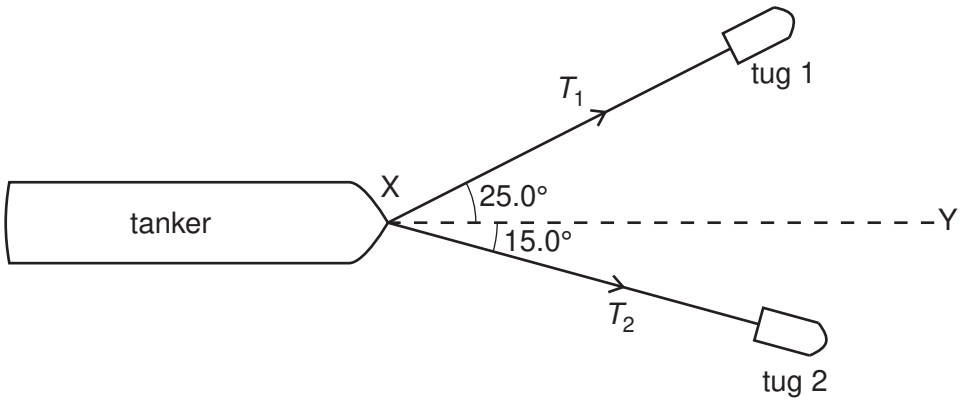

Fig. 1.1

Tug 1 pulls the tanker with a force T_1 at 25.0° to XY. Tug 2 pulls the tanker with a force of T_2 at 15.0° to XY. The resultant force R due to the two tugs is 25.0×10^3 N in the direction XY.

(i) By reference to the forces acting on the tanker, explain how the tanker may be described as being in equilibrium.

.....

.....

.....

.....[2]

© UCLES 2012

(ii) 1. Complete Fig. 1.2 to draw a vector triangle for the forces R, T_1 and T_2. [2]

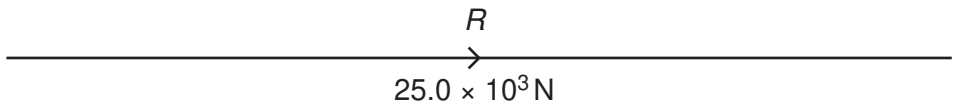

Fig. 1.2

2. Use your vector triangle in Fig. 1.2 to determine the magnitude of T_1 and of T_2.

T_1 = ... N

T_2 = ... N
[2]

2 A motor drags a log of mass 452 kg up a slope by means of a cable, as shown in Fig. 2.1.

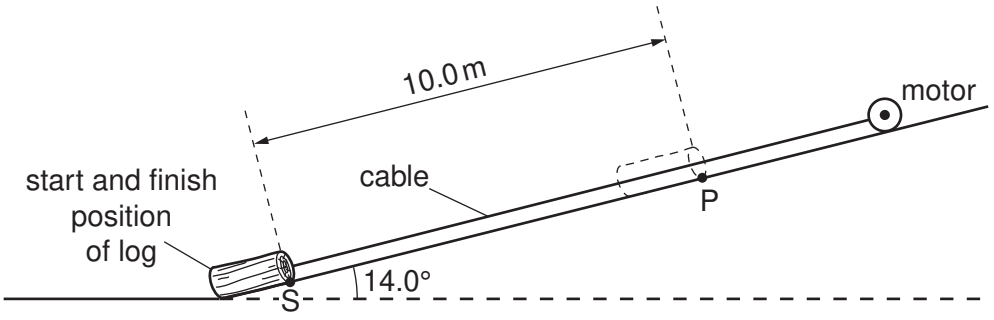

Fig. 2.1

The slope is inclined at 14.0° to the horizontal.

(a) Show that the component of the weight of the log acting down the slope is 1070 N.

[1]

(b) The log starts from rest. A constant frictional force of 525 N acts on the log. The log accelerates up the slope at 0.130 m s^{-2}.

(i) Calculate the tension in the cable.

tension = ... N [3]

(ii) The log is initially at rest at point S. It is pulled through a distance of 10.0 m to point P.

Calculate, for the log,

1. the time taken to move from S to P,

time = ... s [2]

2. the magnitude of the velocity at P.

velocity = ... $m\,s^{-1}$ [1]

(c) The cable breaks when the log reaches point P. On Fig. 2.2, sketch the variation with time t of the velocity v of the log. The graph should show v from the start at S until the log returns to S. [4]



Fig. 2.2

BLANK PAGE

© UCLES 2012

3 **(a)** Show that the pressure P due to a liquid of density ρ is proportional to the depth h below the surface of the liquid.

[4]

(b) The pressure of the air at the top of a mountain is less than that at the foot of the mountain. Explain why the difference in air pressure is not proportional to the difference in height as suggested by the relationship in **(a)**.

.....

.....

.....

.....[2]

4 **(a)** Define *electric field strength*.

.....

.....[1]

(b) A uniform electric field is produced by applying a potential difference of 1200 V across two parallel metal plates in a vacuum, as shown in Fig. 4.1.

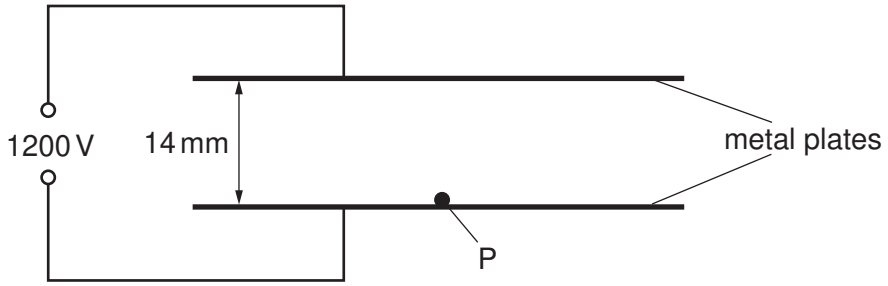

Fig. 4.1

The separation of the plates is 14 mm. A particle P with charge 3.2×10^{-19} C and mass 6.6×10^{-27} kg starts from rest at the lower plate and is moved vertically to the top plate by the electric field.

Calculate

(i) the electric field strength between the plates,

electric field strength = ... $V\,m^{-1}$ [2]

(ii) the work done on P by the electric field,

work done = ... J [2]

(iii) the gain in gravitational potential energy of P,

gain in potential energy = ... J [2]

© UCLES 2012

(iv) the gain in kinetic energy of P,

gain in kinetic energy = ... J [1]

(v) the speed of P when it reaches the top plate.

speed = ... $m\,s^{-1}$ [2]

5 **(a)** **(i)** State Kirchhoff's first law.

.....

.....[1]

(ii) Kirchhoff's first law is linked to the conservation of a certain quantity. State this quantity.

.....[1]

(b) A variable resistor of resistance R is used to control the current in a circuit, as shown in Fig. 5.1.

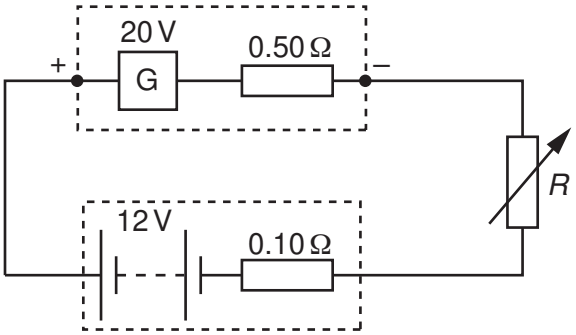

Fig. 5.1

The generator G has e.m.f. 20 V and internal resistance 0.50 Ω. The battery has e.m.f. 12 V and internal resistance 0.10 Ω. The current in the circuit is 2.0 A.

(i) Apply Kirchhoff's second law to the circuit to determine the resistance R.

R = ... Ω [2]

(ii) Calculate the total power generated by G.

power = ... W [2]

© UCLES 2012

(iii) Calculate the power loss in the total resistance of the circuit.

power = ... W [2]

(iv) The circuit is used to supply energy to the battery from the generator. Determine the efficiency of the circuit.

efficiency = ... [2]

6 **(a)** Monochromatic light is diffracted by a diffraction grating. By reference to this, explain what is meant by

(i) diffraction,

.....

.....

.....[2]

(ii) coherence,

.....

.....

.....[1]

(iii) superposition.

.....

.....

.....[1]

(b) A parallel beam of red light of wavelength 630 nm is incident normally on a diffraction grating of 450 lines per millimetre.

Calculate the number of diffraction orders produced.

number of orders = ... [3]

(c) The red light in **(b)** is replaced with blue light. State and explain the effect on the diffraction pattern.

.....

.....

.....

.....

.....[3]

© UCLES 2012

7 A radioactive source emits α-radiation and γ-radiation.

Explain how it may be shown that the source does not emit β-radiation using

(a) the absorption properties of the radiation,

.....

.....

.....

.....

.....[2]

(b) the effects of a magnetic field on the radiation.

.....

.....

.....

.....

.....[2]

BLANK PAGE

Permission to reproduce items where third-party owned material protected by copyright is included has been sought and cleared where possible. Every reasonable effort has been made by the publisher (UCLES) to trace copyright holders, but if any items requiring clearance have unwittingly been included, the publisher will be pleased to make amends at the earliest possible opportunity.

University of Cambridge International Examinations is part of the Cambridge Assessment Group. Cambridge Assessment is the brand name of University of Cambridge Local Examinations Syndicate (UCLES), which is itself a department of the University of Cambridge.

© UCLES 2012